Electric Counterbalance Trucks

E60 – E80

Capacity 6.0 t – 8.0 t | Series 1279

ION PB

The electric powerhouse

- → Two powerful AC drive motors efficiently handle heavy loads up to 8000 kilograms
- → Linde Load Control provides precise and safe operation
- → Twin pedal control enables seamless, fast reversing without repositioning the feet
- → Numerous standard safety systems protect operator, environment and loads

STANDARD AND OPTIONAL EQUIPMENT

	Manufacturer's type designation/equipment	E60 – E80/900
Workplace	Innovative isolation of operator's compartment reduces whole body vibration	●
	Ergonomic and safe truck access thanks to low entry step and grab handle on A-pillar and bonnet	●
	Tilting and height adjustable steering column	●
	Spacious 'comfort' overhead guard for optimum head clearance	●
	Suspended operator's seat – mechanical quick weight adjustment	●
	Range of seating options, by heating, air suspension, active seat ventilation, longitudinal suspension	○
	Swivelling operator's seat	○
	Colour LED display with indicators for steering angle, tilt angle and remaining travel	●
	Top screen in armoured glass	○
	Doors with opening window and door monitoring	○
	External, internal and panoramic mirrors	○
	Illuminated DIN A4 clipboard	○
	Generous storage facilities for paperwork etc.	●
	Fully integrated heater	○
	Fully integrated air conditioning including demist function	○
	Electrical socket 12 V	○
	Radio, DAB+, MP3 player including bluetooth hands-free equipment	○
Drive and Brake System	Twin maintenance-free AC motor front wheel drive	●
	Twin maintenance-free AC motors for lift function	●
	Power settings for efficiency, economy, performance	●
	Automatic parking brake	●
	Hydraulic filter concept providing 6000 hour hydraulic-oil change interval	●
Axles and Tyres	Super Elastic (SE) tyres	●
	Closed Shoulder (CS) tyres CS 20	○
	Antistatic, non-marking tyres	○
Mast/Attachment/ Forks	Standard and triplex mast	●
	Electronically damped tilt stop	●
	Reinforced Linde forks – easy to adjust and designed for a long service life	○
	Load backrest	○
	Different hook-on and integrated attachments	○
Safety	Linde Curve Assist – automatic reduction of travel speed around corners	●
	Electric seat belt monitoring – visual and audible feedback to ensure seat belt is correctly attached	●
	Load weight indicator plus function	○
	Audible reversing alarm	○
	Linde BlueSpot and TruckSpot – visual drive path warning for pedestrians and operators	○
	Surround view – all-round camera system	○
	Speed limitations (via switch, indoor-outdoor, load dependent)	○
	Lighting: LED stripes, VertiLight	○
	Restraint systems (different options)	○
	Linde Safety Guard – audio-visual truck-to-truck and truck-to-pedestrians proximity warning	○
Digitalisation	Data transmission online	○
	Data transmission Wifi	○
	Linde connect:desk – local fleet management with different functional modules	○
	Linde connect:cloud – fleet management as a service (hosted version)	○
	Linde Truck Call App – coordination of transport jobs	○
Operation/load Handling	Twin pedal control – stepless acceleration and fast reversing	●
	Single pedal control – stepless acceleration	○
	Linde Load Control – central levers fully integrated in the armrest for precise control of all hydraulic functions	●
	Individual hydraulic lever system	○
Energy	Choice of lithium-ion or lead acid batteries	○
	Lateral battery change and hinged battery cover for daily checking of lead acid batteries	●
	Flexible charging thanks to rear charging socket	○

● Standard equipment ○ Optional equipment

MAST TABLES

STANDARD MAST (in mm)

Lift	h3: 3850	h3: 4150	h3: 4550	h3: 4850	h3: 5250	h3: 6050
Height measurements	h1: 2871 h2: 150 h4: 4754	h1: 3021 h2: 150 h4: 5054	h1: 3221 h2: 150 h4: 5454	h1: 3371 h2: 150 h4: 5754	h1: 3571 h2: 150 h4: 6154	h1: 3971 h2: 150 h4: 6954
Manufacturer's type designation						
E60	○	○	○	○	○	○

Lift	h3: 3450	h3: 3750	h3: 4150	h3: 4450	h3: 4850	h3: 5650
Height measurements	h1: 2863 h2: 150 h4: 4541	h1: 3013 h2: 150 h4: 4841	h1: 3213 h2: 150 h4: 5241	h1: 3363 h2: 150 h4: 5541	h1: 3563 h2: 150 h4: 5941	h1: 3963 h2: 150 h4: 6741
Manufacturer's type designation						
E70	○	○	○	○	○	○
E80	○	○	○	○	○	○

Lift	h3: 3050	h3: 3350	h3: 3750	h3: 4050	h3: 4450	h3: 5250
Height measurements	h1: 2865 h2: 150 h4: 4444	h1: 3015 h2: 150 h4: 4744	h1: 3215 h2: 150 h4: 5144	h1: 3365 h2: 150 h4: 5444	h1: 3565 h2: 150 h4: 5844	h1: 3965 h2: 150 h4: 6644
Manufacturer's type designation						
E80/900	○	○	○	○	○	○

TRIPLEX MAST (in mm)

Lift	h3: 4405	h3: 4855	h3: 5155	h3: 5370	h3: 5455	h3: 5605
Height measurements	h1: 2860 h2: 1405 h4: 5795	h1: 3010 h2: 1555 h4: 6245	h1: 2856 h2: 1705 h4: 6241	h1: 2867 h2: 1905 h4: 6267	h1: 3210 h2: 1755 h4: 6845	h1: 3006 h2: 1855 h4: 6691
Manufacturer's type designation						
E60	–	–	–	○	–	–
E70	–	–	○	–	–	○
E80	–	–	○	–	–	○
E80/900	○	○	–	–	○	–

Lift	h3: 5820	h3: 5905	h3: 6205	h3: 6420	h3: 7105	h3: 7255
Height measurements	h1: 3017 h2: 2055 h4: 6717	h1: 3360 h2: 1905 h4: 7295	h1: 3206 h2: 2055 h4: 7291	h1: 3217 h2: 2255 h4: 7317	h1: 3760 h2: 2305 h4: 8495	h1: 3556 h2: 2405 h4: 8341
Manufacturer's type designation						
E60	○	–	–	○	–	–
E70	–	–	○	–	–	○
E80	–	–	○	–	–	○

○ Optional equipment – Not available

h1: Mast height, lowered **h2:** Free lift **h3:** Lift **h4:** Mast height, extended

TECHNICAL DATA (according to VDI 2198)

Characteristics	1.1	Manufacturer (abbreviation)		Linde MH	Linde MH	Linde MH	Linde MH
	1.2	**Manufacturer's type designation**		**E60**	**E70**	**E80**	**E80/900**
	1.2a	Series		1279-00	1279-00	1279-00	1279-00
	1.3	Drive		Battery	Battery	Battery	Battery
	1.4	Operation		Seat	Seat	Seat	Seat
	1.5	Rated capacity/rated load	Q (t)	6.0	7.0	8.0	8.0
	1.6	Load centre distance	c (mm)	600	600	600	900
	1.8	Load distance, centre of drive axle to fork	x (mm)	710	720	720	750
	1.9	Wheelbase	y (mm)	2300	2300	2300	2400
Weight	2.1	Service weight	kg	12199 [11728][1)2)]	12958 [12723][1)2)]	14005 [13807][1)2)]	15782 [15808][1)2)]
	2.2	Axle loading, laden front/rear	kg	15940/2259 [15813/1915][1)2)]	17856/2102 [17847/1876][1)2)]	19641/2364 [19717/2090][1)2)]	21485/2297 [21515/2293][1)2)]
	2.3	Axle loading, unladen front/rear	kg	6523/5676 [6396/5332][1)2)]	6839/6119 [6830/5893][1)2)]	7050/6955 [7126/6681][1)2)]	7985/7797 [8015/7793][1)2)]
Tyres/chassis	3.1	Tyres: solid rubber, superelastic, pneumatic, polyurethane		SE	SE twin	SE twin	SE twin
	3.2	Tyre size, front		355/50-20	8.25-15	315/70-15 (300-15)	315/70-15 (300-15)
	3.3	Tyre size, rear		8.25-15	315/70-15 (300-15)	315/70-15 (300-15)	315/70-15 (300-15)
	3.5	Wheels, number front/rear (x = driven wheels)		2x/2	4x/2	4x/2	4x/2
	3.6	Tread, front	b 10 (mm)	1326	1514	1564	1564
	3.7	Tread, rear	b 11 (mm)	1406	1396	1396	1396
Dimensions	4.1	Mast/fork carriage tilt, forward/backward	/ (°)	5.0/7.5	5.0/7.5	5.0/7.5	5.0/7.5
	4.2	Mast height, lowered	h 1 (mm)	2890	2888	2888	2885
	4.3	Free lift	h 2 (mm)	150	150	150	150
	4.4	Lift	h 3 (mm)	3850	3450	3450	3050
	4.5	Mast height, extended	h 4 (mm)	4754	4545	4545	4447
	4.7	Height of overhead guard (cabin)	h 6 (mm)	2838	2838	2838	2838
	4.8	Seat height relating to SIP/stand height	h 7 (mm)	1705	1705	1705	1705
	4.12	Coupling height	h 10 (mm)	853	854	854	858
	4.19	Overall length	l 1 (mm)	4693	4703	4703	5533
	4.20	Length to fork face	l 2 (mm)	3493	3503	3503	3733
	4.21	Overall width	b 1/b 2 (mm)	1660/1616	2000/1640	2111/1654	2111/1654
	4.22	Fork dimensions DIN ISO 2331	s / e / l (mm)	60 × 130 × 1200	70 × 150 × 1200	70 × 150 × 1200	70 × 200 × 1800
	4.23	Fork carriage to ISO 2328, class/type A, B		4A	4A	4A	4A
	4.24	Fork carriage width	b 3 (mm)	1600	1800	2180	2180
	4.31	Ground clearance, laden, below mast	m 1 (mm)	228	220	220	220
	4.32	Ground clearance, centre of wheelbase	m 2 (mm)	214	210	210	210
	4.34.1	Aisle width for pallets 1000 × 1200 crossways	A st (mm)	4910[3)]	4920[3)]	4920[3)]	5155[3)]
	4.34.2	Aisle width for pallets 800 × 1200 lengthways	A st (mm)	5110[3)]	5120[3)]	5120[3)]	5355[3)]
	4.35	Turning radius	W a (mm)	3000	3000	3000	3205
	4.36	Inside turning radius	b 13 (mm)	877	877	877	930
Performance	5.1	Travel speed, laden/unladen	km/h	20/20[4)]	20/20[4)]	20/20[4)]	20/20[4)]
	5.2	Lifting speed, laden/unladen	m/s	0.38/0.46	0.32/0.46	0.3/0.46	0.3/0.46
	5.3	Lowering speed, laden/unladen	m/s	0.54/0.5	0.56/0.45	0.56/0.45	0.56/0.45
	5.5	Drawbar pull, laden/unladen	N	28800/29000	28700/28900	28500/28800	28000/28300
	5.6	Max. drawbar pull, laden/unladen	N	43000/43000	43000/43000	43000/43000	43000/43000
	5.7	Gradeability, laden/unladen	%	16.4/24.6	14.9/23.0	13.4/21.1	12.2/18.4
	5.8	Max. gradeability, laden/unladen	%	20.5/32.0 [21.0/33.0][2)]	19.5/31.0 [20.0/32.0][2)]	17.5/28.5 [18.0/29.5][2)]	16.0/25.0 [16.5/26.0][2)]
	5.9	Acceleration time, laden/unladen	s	5.6/5.2 [5.2/4.8][2)]	5.8/5.4 [5.4/5.0][2)]	6.3/5.9 [5.5/5.1][2)]	6.9/6.5 [5.9/5.5][2)]
	5.10	Service brake		hydr./mech.	hydr./mech.	hydr./mech.	hydr./mech.
Electric-engine	6.1	Drive motor rating S2 60 min	kW	2x 10.5	2x 10.5	2x 10.5	2x 10.5
	6.2	Lift motor rating at S3 15%	kW	2x 21	2x 21	2x 21	2x 21
	6.3	Battery according to DIN 43531/35/36 A,B,C,no		43 536 A	43 536 A	43 536 A	43 536 A
	6.4	Battery voltage/nominal capacity K5	(V)/(Ah) or kWh	80/1240 [90/1440][2)]	80/1240 [90/1440][2)]	80/1240 [90/1440][2)]	80/1240 [90/1440][2)]
	6.4a	Battery energy content	(kWh)	79.36 [126.8][2)]	79.36 [126.8][2)]	79.36 [126.8][2)]	79.36 [126.8][2)]
	6.5	Battery weight (±5%)	kg	2785 [2178][2)]	2785 [2178][2)]	2785 [2178][2)]	2785 [2178][2)]
	6.6	Energy consumption according to DIN EN 16796	kWh/h	14.0[5)]	14.7[5)]	16.0[5)]	18.5[5)]
	6.6.1	CO2 equivalent according to EN 16796	(kg/h)	7.6	7.9	8.7	10
	6.7	Turnover output according to VDI 2198	t/h	361.0 [365.0][2)]	420.0 [443.0][2)]	471.0 [502.0][2)]	465.0 [486.0][2)]
	6.8	Turnover efficiency according to VDI 2198	t/kWh	21.5 [20.1][2)]	23.8 [23.2][2)]	24.5 [24.1][2)]	21 [20.2][2)]

1) Figures with battery, see line 6.4/6.5.
2) Figures in [ ] with Li-ION battery see line 6.4
3) Including a 200 mm (min.) operating aisle clearance
4) Depending on the battery technology
5) Power consumption with 45 working cycles per hour

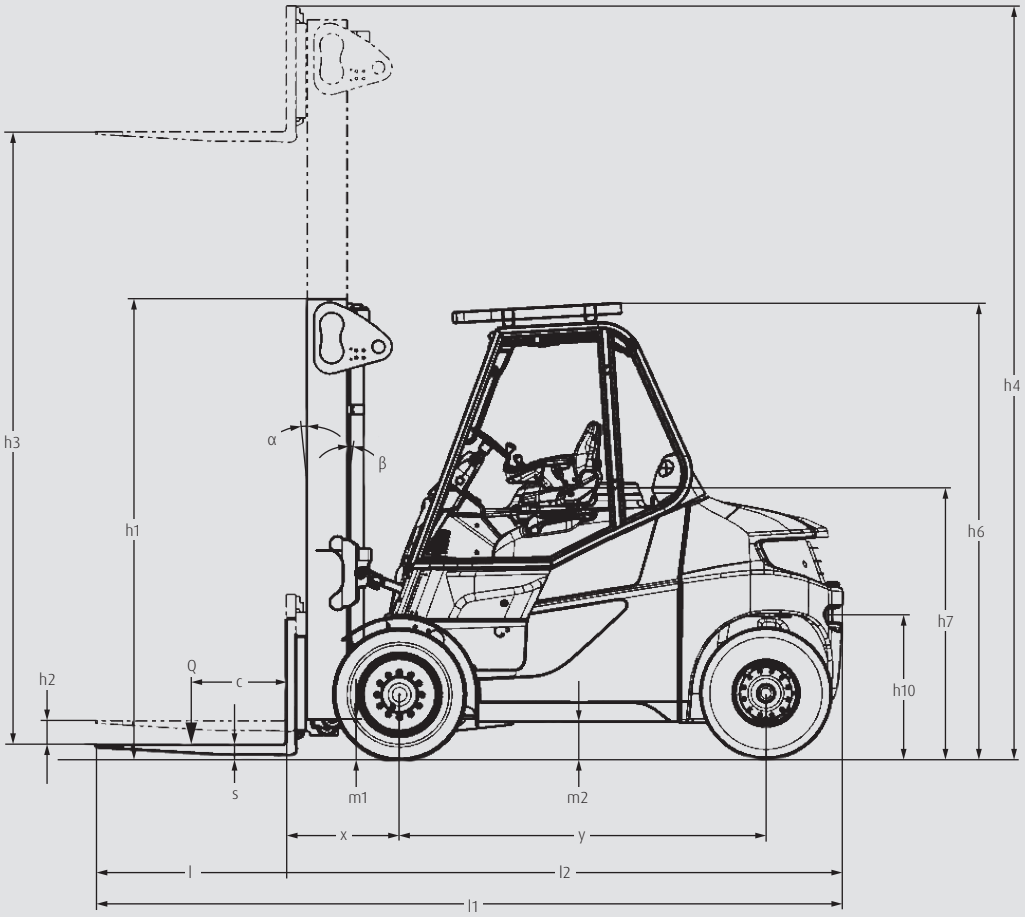
h3
h1
α
β
h4
h6
h7
h10
h2
Q
c
s
m1
m2
x
y
l
l2
l1

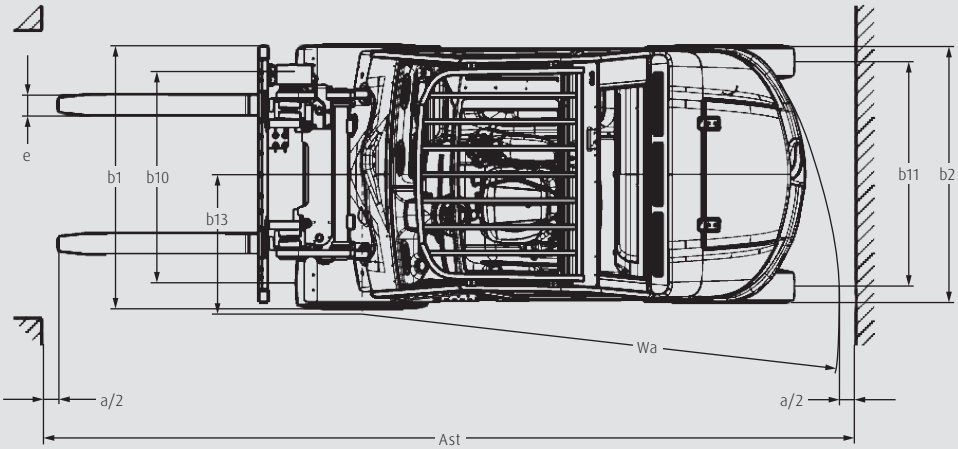
e
b1
b10
b13
b11
b2
Wa
a/2
a/2
Ast

CHARACTERISTICS

All-round visibility

Safety

→ The protective roof protects the operator during transport of heavy goods
→ The cab's frame forms a large protective zone
→ Nested mast profiles allow good visibility while handling loads
→ Automatic parking brake guarantees safety on ramps

Workplace

Ergonomics

→ Operating controls are within easy reach of the operator for intuitive, fatigue-free operation
→ Twin pedals and control levers integrated into the armrest reduce physical stress
→ Adjustable seat and armrest unit provide seating comfort
→ Isolated operator's compartment reduces vibrations and ensures a smooth ride

Linde Load Control

Handling

→ Linde Load Control enables fast and easy control of lift mast movements
→ Linde Curve Assist supports the operator on tight curves
→ Driving dynamics can be individually adjusted to the exact application requirements

Easy access

Service

→ Fully enclosed drive, lift and Linde electrical controls ensure the highest reliability
→ Water-cooled precision parts ensure high availability even under extreme conditions
→ Entire drive axle, including three-phase motors, reduction gear and oil bath brakes are maintenance-free
→ Long maintenance intervals and easily accessible service parts enable uninterrupted use

Subject to modification in the interest of progress. Illustrations and technical details could include options and not binding for actual constructions. All dimensions subject to usual tolerances.

Linde Material Handling

ncnielsen
Nørregade 66, DK-7860 Balling | Tlf.: +45 99 83 83 83
nc-nielsen.dk | info@nc-nielsen.dk